Security Services Inc.

One Town Center Road
Boca Raton, FL 33431
(561) 988-3600
FAX: (561) 988-3675

Signaling Line Circuit Wiring Manual

for the

Unimode 200 & 9600

Document 51520
09/25/2001 Rev: B
PN 51520:B ECN 01-527

Fire Alarm System Limitations

While a fire alarm system may lower insurance rates, it is not a substitute for fire insurance!

An automatic fire alarm system–typically made up of smoke detectors, heat detectors, manual pull stations, audible warning devices, and a fire alarm control with remote notification capability–can provide early warning of a developing fire. Such a system, however, does not assure protection against property damage or loss of life resulting from a fire.

The Manufacturer recommends that smoke and/or heat detectors be located throughout a protected premise following the recommendations of the current edition of the National Fire Protection Association Standard 72 (NFPA 72), manufacturer's recommendations, State and local codes, and the recommendations contained in the Guide for Proper Use of System Smoke Detectors, which is made available at no charge to all installing dealers. A study by the Federal Emergency Management Agency (an agency of the United States government) indicated that smoke detectors may not go off in as many as 35% of all fires. While fire alarm systems are designed to provide early warning against fire, they do not guarantee warning or protection against fire. A fire alarm system may not provide timely or adequate warning, or simply may not function, for a variety of reasons:

Smoke detectors may not sense fire where smoke cannot reach the detectors such as in chimneys, in or behind walls, on roofs, or on the other side of closed doors. Smoke detectors also may not sense a fire on another level or floor of a building. A second-floor detector, for example, may not sense a first-floor or basement fire.

Particles of combustion or "smoke" from a developing fire may not reach the sensing chambers of smoke detectors because:

- Barriers such as closed or partially closed doors, walls, or chimneys may inhibit particle or smoke flow.
- Smoke particles may become "cold," stratify, and not reach the ceiling or upper walls where detectors are located.
- Smoke particles may be blown away from detectors by air outlets.
- Smoke detectors may be drawn into air returns before reaching the detector.

The amount of "smoke" present may be insufficient to alarm smoke detectors. Smoke detectors are designed to alarm at various levels of smoke density. If such density levels are not created by a developing fire at the location of detectors, the detectors will not go into alarm.

Smoke detectors, even when working properly, have sensing limitations. Detectors that have photoelectronic sensing chambers tend to detect smoldering fires better than flaming fires, which have little visible smoke. Detectors that have ionizing-type sensing chambers tend to detect fast-flaming fires better than smoldering fires. Because fires develop in different ways and are often unpredictable in their growth, neither type of detector is necessarily best and a given type of detector may not provide adequate warning of a fire.

Smoke detectors cannot be expected to provide adequate warning of fires caused by arson, children playing with matches (especially in bedrooms), smoking in bed, and violent explosions (caused by escaping gas, improper storage of flammable materials, etc.).

Heat detectors do not sense particles of combustion and alarm only when heat on their sensors increases at a predetermined rate or reaches a predetermined level. Rate-of-rise heat detectors may be subject to reduced sensitivity over time. For this reason, the rate-of-rise feature of each detector should be tested at least once per year by a qualified fire protection specialist. *Heat detectors are designed to protect property, not life.*

IMPORTANT! ***Smoke detectors*** *must be installed in the same room as the control panel and in rooms used by the system for the connection of alarm transmission wiring, communications, signaling, and/or power.* If detectors are not so located, a developing fire may damage the alarm system, crippling its ability to report a fire.

Audible warning devices such as bells may not alert people if these devices are located on the other side of closed or partly open doors or are located on another floor of a building. Any warning device may fail to alert people with a disability or those who have recently consumed drugs, alcohol or medication. Please note that:

- Strobes can, under certain circumstances, cause seizures in people with conditions such as epilepsy.
- Studies have shown that certain people, even when they hear a fire alarm signal, do not respond or comprehend the meaning of the signal. It is the property owner's responsibility to conduct fire drills and other training exercise to make people aware of fire alarm signals and instruct them on the proper reaction to alarm signals.
- In rare instances, the sounding of a warning device can cause temporary or permanent hearing loss.

A fire alarm system will not operate without any electrical power. If AC power fails, the system will operate from standby batteries only for a specified time and only if the batteries have been properly maintained and replaced regularly.

Equipment used in the system may not be technically compatible with the control. It is essential to use only equipment listed for service with your control panel.

Telephone lines needed to transmit alarm signals from a premise to a central monitoring station may be out of service or temporarily disabled. For added protection against telephone line failure, backup radio transmission systems are recommended.

The most common cause of fire alarm malfunction is inadequate maintenance. To keep the entire fire alarm system in excellent working order, ongoing maintenance is required per the manufacturer's recommendations, and UL and NFPA standards. At a minimum, the requirements of Chapter 7 of NFPA 72 shall be followed. Environments with large amounts of dust, dirt or high air velocity require more frequent maintenance. A maintenance agreement should be arranged through the local manufacturer's representative. Maintenance should be scheduled monthly or as required by National and/or local fire codes and should be performed by authorized professional fire alarm installers only. Adequate written records of all inspections should be kept.

Installation Precautions

Adherence to the following will aid in problem-free installation with long-term reliability:

WARNING - *Several different sources of power can be connected to the fire alarm control panel.* Disconnect all sources of power before servicing. Control unit and associated equipment may be damaged by removing and/or inserting cards, modules, or interconnecting cables while the unit is energized. Do not attempt to install, service, or operate this unit until this manual is read and understood.

CAUTION - *System Reacceptance Test after Software Changes.* To ensure proper system operation, this product must be tested in accordance with NFPA 72 Chapter 7 after any programming operation or change in site-specific software. Reacceptance testing is required after any change, addition or deletion of system components, or after any modification, repair or adjustment to system hardware or wiring.

All components, circuits, system operations, or software functions known to be affected by a change must be 100% tested. In addition, to ensure that other operations are not inadvertently affected, at least 10% of initiating devices that are not directly affected by the change, up to a maximum of 50 devices, must also be tested and proper system operation verified.

This system meets NFPA requirements for operation at 0-49° C/32-120° F and at a relative humidity of 85% RH (non-condensing) at 30° C/86° F. However, the useful life of the system's standby batteries and the electronic components may be adversely affected by extreme temperature ranges and humidity. Therefore, it is recommended that this system and all peripherals be installed in an environment with a nominal room temperature of 15-27° C/60-80° F.

Verify that wire sizes are adequate for all initiating and indicating device loops. Most devices cannot tolerate more than a 10% I.R. drop from the specified device voltage.

Like all solid state electronic devices, this system may operate erratically or can be damaged when subjected to lightning-induced transients. Although no system is completely immune from lightning transients and interferences, proper grounding will reduce susceptibility. *Overhead or outside aerial wiring is not recommended, due to an increased susceptibility to nearby lightning strikes.* Consult with the Technical Services Department if any problems are anticipated or encountered.

Disconnect AC power and batteries prior to removing or inserting circuit boards. Failure to do so can damage circuits.

Remove all electronic assemblies prior to any drilling, filing, reaming, or punching of the enclosure. When possible, make all cable entries from the sides or rear. Before making modifications, verify that they will not interfere with battery, transformer, and printed circuit board location.

Do not tighten screw terminals more than 9 in-lbs. Over-tightening may damage threads, resulting in reduced terminal contact pressure and difficulty with screw terminal removal.

Though designed to last many years, system components can fail at any time. This system contains static-sensitive components. Always ground yourself with a proper wrist strap before handling any circuits so that static charges are removed from the body. Use static-suppressive packaging to protect electronic assemblies removed from the unit.

Follow the instructions in the installation, operating, and programming manuals. These instructions must be followed to avoid damage to the control panel and associated equipment. FACP operation and reliability depend upon proper installation by authorized personnel.

FCC Warning

WARNING: This equipment generates, uses, and can radiate radio frequency energy and if not installed and used in accordance with the instruction manual, may cause interference to radio communications. It has been tested and found to comply with the limits for class A computing device pursuant to Subpart B of Part 15 of FCC Rules, which is designed to provide reasonable protection against such interference when operated in a commercial environment. Operation of this equipment in a residential area is likely to cause interference, in which case the user will be required to correct the interference at his own expense.

Canadian Requirements

This digital apparatus does not exceed the Class A limits for radiation noise emissions from digital apparatus set out in the Radio Interference Regulations of the Canadian Department of Communications.

Le present appareil numerique n'emet pas de bruits radioelectriques depassant les limites applicables aux appareils numeriques de la classe A prescrites dans le Reglement sur le brouillage radioelectrique edicte par le ministere des Communications du Canada.

This Page Intentionally Left Blank

Table of Contents

Introduction

Scope

This document describes the operation, installation and wiring of various Signaling Line Circuit (SLC) devices when used with the ADT Unimode 200 or the ADT Unimode 9600 control panels. It also provides basic information that applies to ADT SLC loops in general, such as the branch resistance measurements.

Additional information about the specific control panel and the modules and detectors referenced in this document can be found in the respective installation manual as listed in Table 1, “Reference Documentation,” on page 8.

Overview

Communication between the control panel and intelligent addressable monitor and control devices takes place through a Signaling Line Circuit (SLC), which can be wired to meet the requirements of NFPA Style 4, Style 6, or Style 7.

Devices

Isolator Module

The **I300** Isolator Module permits a zone of detectors and modules to be fault isolated from the remainder of the SLC loop, allowing critical components to function in the event of a circuit fault. Isolator modules are required to meet the requirements of an NFPA Style 7 circuit.

Monitor Modules

Addressable modules that allow the control panel to monitor entire circuits of conventional alarm initiating devices, such as manual pull stations, smoke detectors, heat detectors, waterflow and supervisory devices.

MMF-300 - Monitors a Style B (Class B) or Style D (Class A) circuit of dry-contact input devises.

MMF-301 - Same as the MMF-300 except offered in a smaller package for mounting with the device.

MMF-302 - Monitors a single IDC of two-wire smoke detectors.

MDF-300 - Similar to MMF-300, but provides for two independent IDCs.

Control Module

Through the **CMF-300** addressable control module, the control panel can selectively activate a Notification Appliance Circuit (NAC).

Relay Module

The **CRF-300** addressable relay module provides the control panel with a dry-contact output for activating a variety of auxiliary devices.

Intelligent Detectors

AD350 - A smoke sensor that combines a photoelectric sensing chamber and 135°F (57.2°C) fixed temperature heat detection. The sensor uses addressable communication to transmit smoke density and other information to the control panel. It adjusts its detection parameters and alarm threshold depending on the ambient conditions it samples in its environment.

CP350 - An addressable ionization smoke detector which measures the level of combustion products in its chamber using the ‘ionization principle’.

D350P - An addressable photoelectric duct detector. The **D350RP** includes an alarm relay.

H350 - An addressable detector using a thermistor sensing circuit for fast response. **H350R** incorporates a thermal rate of rise of 15°F (9.4°C)/minute.

SD350 - An addressable photoelectric smoke detector which provides smoke sensing utilizing optical sense technology. The **SD350T** includes a 135° F fixed thermal sensor.

Manual Pull Station

The **ADT-BG-12LX** is a dual-action pull station that, when activated, provides an addressable identification and its location to the control panel. An addressable monitor module is mounted inside the pull station to facilitate servicing and replacement.

300 Series Addressable Devices

The 300 series of addressable devices are fully compatible with the Unimode 200 and Unimode 9600 FACPs. The devices must be configured for CLIP (Classic Loop Interface Protocol) Mode operation. The address of 300 series devices cannot be set above 99. Compatible devices include:

- SD300 Photo
- SD300T Photo w/Thermal
- CP300 Ionization
- BG-10LX Pull Station
- M300 Monitor Module
- M301 Mini Monitor Module
- M302 2-wire Monitor Module
- C304 Control/Relay Module

Reference Documentation

The table below accommodates a list of document sources containing additional information regarding the devices used on a Signaling Line Circuit:

For information on...	Refer to...	Part Number
Unimode 200	Instruction Manual	50101
Unimode 9600	Instruction Manual	51363
Compatible Devices	Device Compatibility Document	51352
ADT-BG-12LX Pull Station	Installation Instructions	51241
MMF-300 Monitor Module	Installation Instructions	F300-02-00
MMF-301 Mini Monitor Module	Installation Instructions	F300-05-00
MMF-302 Monitor Module	Installation Instructions	F300-03-00
MDF-300 Dual Monitor Module	Installation Instructions	F300-09-00
CMF-300 Control Module	Installation Instructions	F300-07-00
CRF-300 Relay Module	Installation Instructions	F300-04-00
I300 Isolator Module	Installation Instructions	F300-06-00
AD350 Multicriteria Detector	Installation Instructions	F300-17-00
SD350 & SD350T Photo Detector	Installation Instructions	F300-14-00
CP350 Ionization Detector	Installation Instructions	F300-15-00
H350 Heat Detector	Installation Instructions	F300-12-00
H350R Heat Detector w/ROR	Installation Instructions	F300-13-00
D350P Duct Detector	Installation Instructions	F300-10-00
D350RP Duct Detector w/Relay	Installation Instructions	F300-11-00
B350LP Plug-in Detector Base	Installation Instructions	F400-21-00
B501BH Sounder Detector Base	Installation Instructions	D650-03-00
B524RB Relay Detector Base	Installation Instructions	D450-16-00

Table 1 Reference Documentation

SLC Performance

SLC performance depends on the type of circuit: Style 4, Style 6, or Style 7.

Note: SLC operation meeting Style 7 requirements isolates each device on the SLC from faults that may occur within other areas of the SLC.

Wiring style requirements are determined by national and local codes. Consult with the Authority Having Jurisdiction before wiring the SLC. The table below (derived from NFPA 72-1999) lists the trouble conditions that result when a fault exists on an SLC.

Type of Fault	Style 4	Style 6	Style 7
Single Open	Trouble	Alarm, Trouble	Alarm, Trouble
Single Ground	Alarm, Trouble (ground)	Alarm, Trouble (ground)	Alarm, Trouble (ground)
Short	Trouble	Trouble	Alarm, Trouble
Short and open	Trouble	Trouble	Trouble
Short and ground	Trouble	Trouble	Alarm, Trouble
Open and ground	Trouble	Alarm, Trouble	Alarm, Trouble
Communications loss	Trouble	Trouble	Trouble

- Trouble - The control panel will indicate a trouble condition for this type of fault.
- Alarm - The control panel must be able to process an alarm input signal in the presence of this type of fault.

Table 2 SLC Performance

Surge Suppression

One primary surge protector must be used with each SLC wiring pair whenever SLC wiring runs outside the building. For detailed information refer to "Appendix B: Surge Suppression" on page 45.

Notes

Wiring Requirements

Wire Sizing

The SLC requires use of a specific wire type to ensure proper circuit operation. It is recommended that all SLC wiring be twisted-pair shielded to minimize the effects of electrical interference. Wire size should be no smaller than 18 AWG (0.75 mm^2) and no larger than 12 AWG (3.25 mm^2) wire.

The wire size depends on the length of the SLC circuit. Use the table below to determine the specific wiring requirements for the SLC.

Wire Requirements	**Distance in feet (meters)**	**Typical Wire Type[1]**
Twisted-pair shielded	10,000 (3048)	12 AWG - Belden 9583, Genesis 4410, Signal 98230, WPW 999
	8,000 (2438)	14 AWG - Belden 9581, Genesis 4408, Signal 98430, WPW 995
	4,875 (1486)	16 AWG - Belden 9575, Genesis 4406 & 4606, Signal 98630, WPW 991
	3,225 (983)	18 AWG - Belden 9574, Genesis 4402 & 4602, Signal 98300, WPW 975
Untwisted, unshielded wire, inside conduit or not in conduit.	1,000 (305)	12 to 18 AWG

1. AWG wire size conversion to metric size: 12 AWG = 3.25mm^2; 14 AWG = 2.00mm^2; 16 AWG = 1.30mm^2; 18 AWG = 0.75mm^2

Table 3 Wire Requirements

Measuring Resistance & Length

Two-Wire SLC - Style 4 (Class B)

Loop Resistance

T-tapping of the SLC wiring is permitted for 2-wire Style 4 configurations. The total DC resistance from the control panel to each branch end cannot exceed 40 ohms. Measure DC resistance as detailed and shown below:

1. With power removed, short the termination point of one branch at a time and measure the DC resistance from the beginning of the SLC to the end of that particular branch.
2. Repeat this procedure for all remaining branches in the SLC.

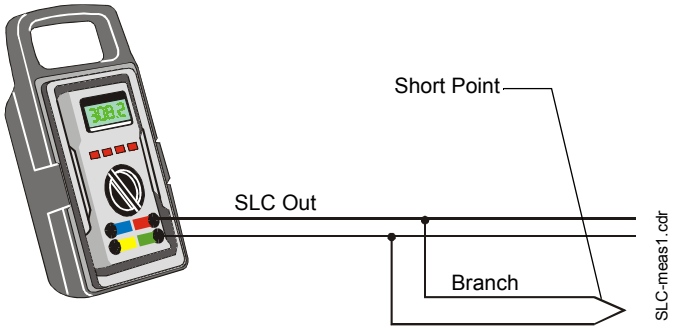

Figure 1 Measuring DC Resistance of a Two-Wire SLC

Total Wire Length

The total wire length of all combined branches of one SLC cannot exceed the limits set forth in each system's instruction manual. Determine the total length in each SLC by summing the wire lengths of all branches of one SLC.

In the following figure, the total length of the SLC is determined by adding the lengths of Branch A plus Branch B plus Branch C.

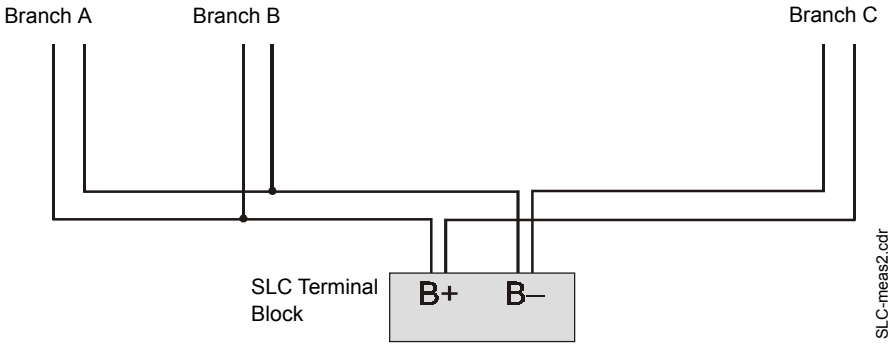

Figure 2 Measuring the Total Wire Length - Two-Wire SLC

Four-Wire SLC Style 6 & 7 (Class A)

Loop Resistance

The total DC resistance of the SLC pair cannot exceed 40 ohms. Measure DC resistance as detailed and shown below.

1. Disconnect the SLC channel B (Out) and SLC channel A (Return) at the control panel.
2. Short the two leads of SLC channel A (Return).
3. Measure the resistance across the SLC channel B (Out) leads.

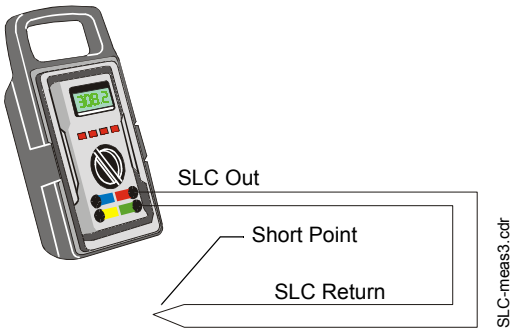

Figure 3 Measuring DC Resistance of a Four-Wire SLC

Total Wire Length

The total wire length in a four-wire SLC cannot exceed the limits set forth in each system's instruction manual. The figure below identifies the output and return loops from SLC terminal on the control panel:

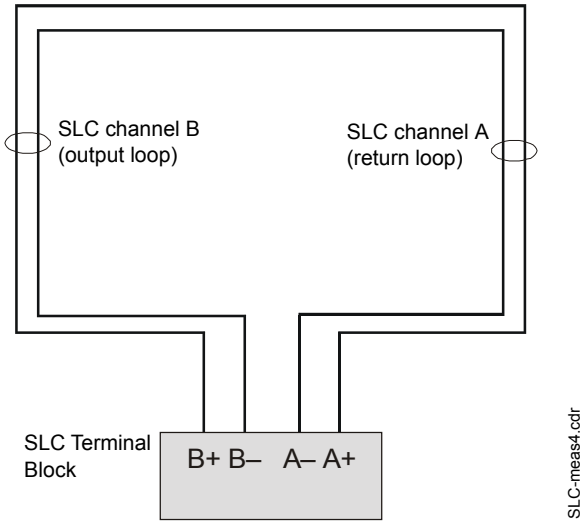

Figure 4 Measuring the Wire Length – Four-Wire SLC

Shield Wire Termination

The drawing below shows the method of proper termination of the shield.

Connect the metal conduit to the cabinet by using the proper connector. Feed the shielded wire through the conduit, into the control box. The shield drain wire must be connected to the “shield” terminal on the SLC terminal block.

Note: Use of good wiring practice consistent with local electrical codes is expected.

CAUTION: Do not let the shield drain wire or the shield foil touch the system cabinet or be connected to earth ground at any point.

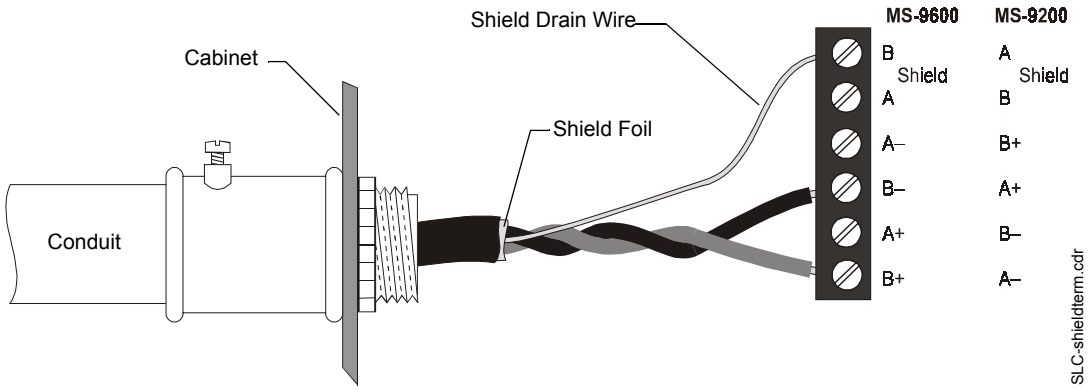

Figure 5 Shield Termination

Control Panel Terminal Blocks

The terminal blocks on the control panel circuit board that concern the SLC circuit are described below. For more information on this subject refer to the control panel's Instruction Manual.

Unimode 200

TB4 provides three types of 24 VDC power; Unregulated, Nonresettable and Resettable.

TB6 provides connections for the SLC wiring.

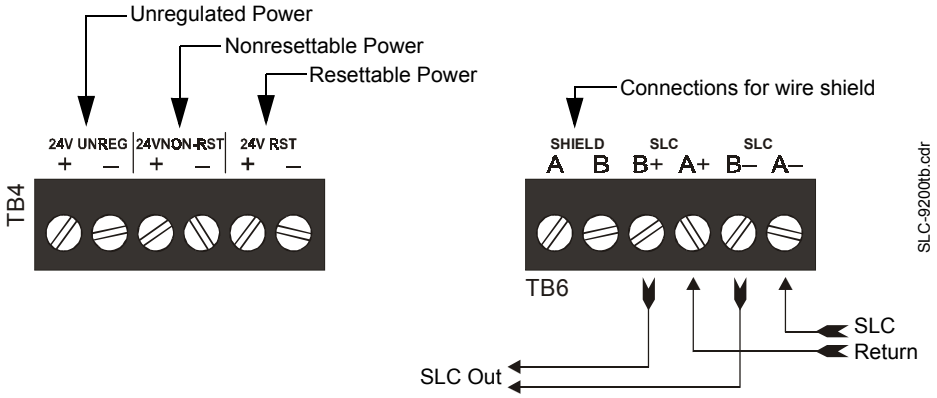

Figure 6 Unimode 200 Terminal Blocks

Unimode 9600

TB3 provides two types of 24 VDC power; Nonresettable and Resettable.

TB8 provides connections for the SLC wiring.

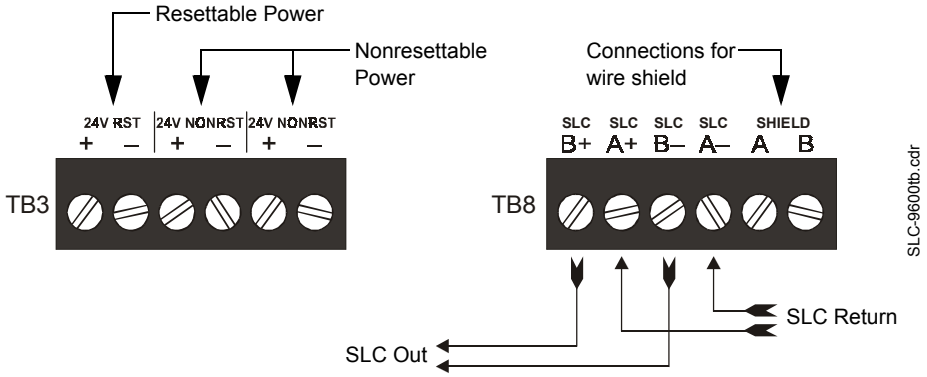

Figure 7 Unimode 9600 Terminal Blocks

Notes

Non-Isolated Circuits

Overview

This chapter concerns itself with the two styles of circuits that do not require isolation devices:

- NFPA Style 4
- NFPA Style 6

NFPA Style 4 SLC

NFPA Style 4 requirements can be met by using the diagram below.

- T-tapping of the SLC wiring is allowed for Style 4 configuration.

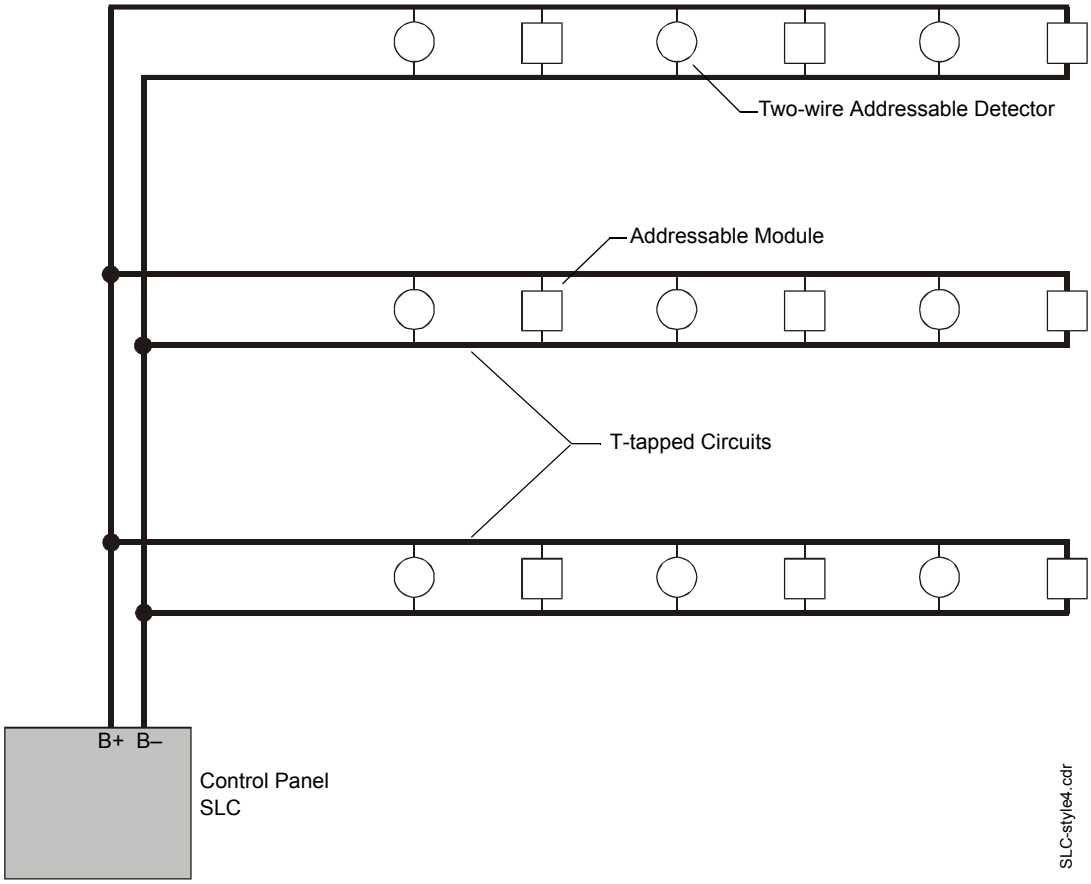

Figure 8 Basic NFPA Style 4 SLC

NFPA Style 6 SLC

NFPA Style 6 requirements can be met by using the diagram below.

- T-tapping of the SLC wiring is NOT allowed for Style 6 configuration.

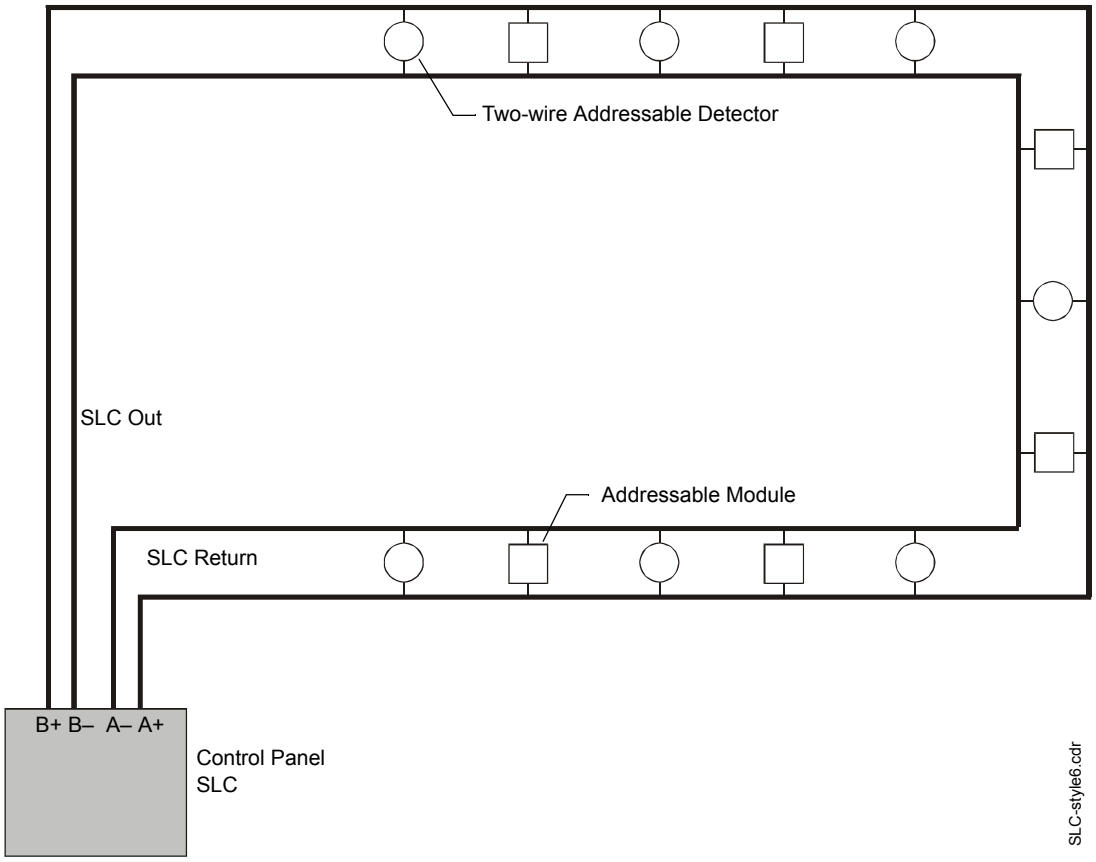

Figure 9 Basic NFPA Style 6 SLC

SLC Circuits with Isolators

Fault Isolator Module - I300

The I300 is used to protect critical elements of the SLC from faults on other SLC branches or segments

A Fault Isolator Module on both sides of a device is required to comply with NFPA Style 7 requirements.

A maximum of 25 addressable devices can be connected between isolator Modules.

When more than 100 Isolator Modules are connected to an SLC loop, the address capacity of the loop is reduced by two (2) addresses for every isolator device in excess of 100.

Isolating an SLC Branch

The module continuously monitors the circuit connected to terminals 3(–) and 4(+). Upon powerup, an integral relay is latched on. The module periodically pulses the coil of this relay. A short circuit on the SLC resets the relay. The module detects the short and disconnects the faulted SLC branch or segment by opening the positive side of the SLC (terminal 4). This isolates the faulty branch from the remainder of the loop preventing a communication problem with all other addressable devices on the remaining branches (labeled "Continuation of the SLC" in the figure below). During a fault condition, the control panel registers a trouble condition for each addressable device which is isolated on the SLC segment or branch. Once the fault is removed, the module automatically reapplies power to the SLC branch or segment.

Wiring an Isolator Module

The figure below shows typical wiring of an Isolator Module:

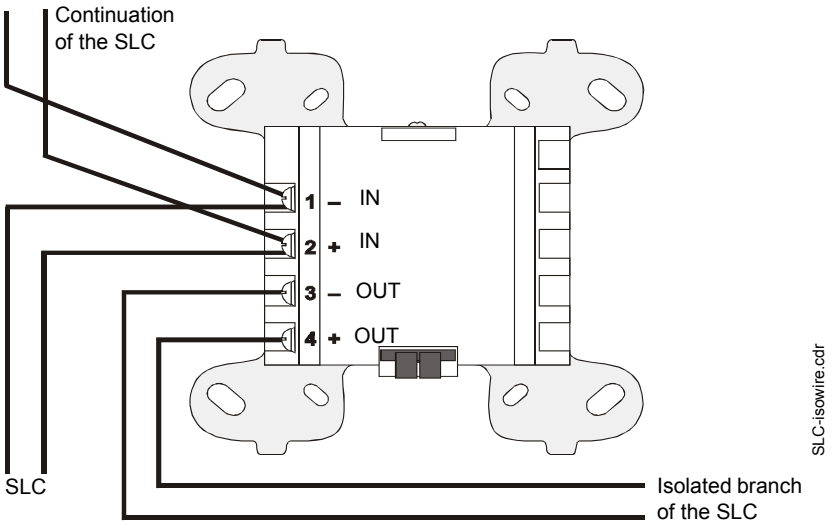

Figure 10 Wiring an I300 Module

NFPA Style 4 SLC Using an I300 Module

A variation of a Style 4 operation using isolator modules to protect each branch of the SLC. Refer to Figure 10 on page 19 for I300 wiring.

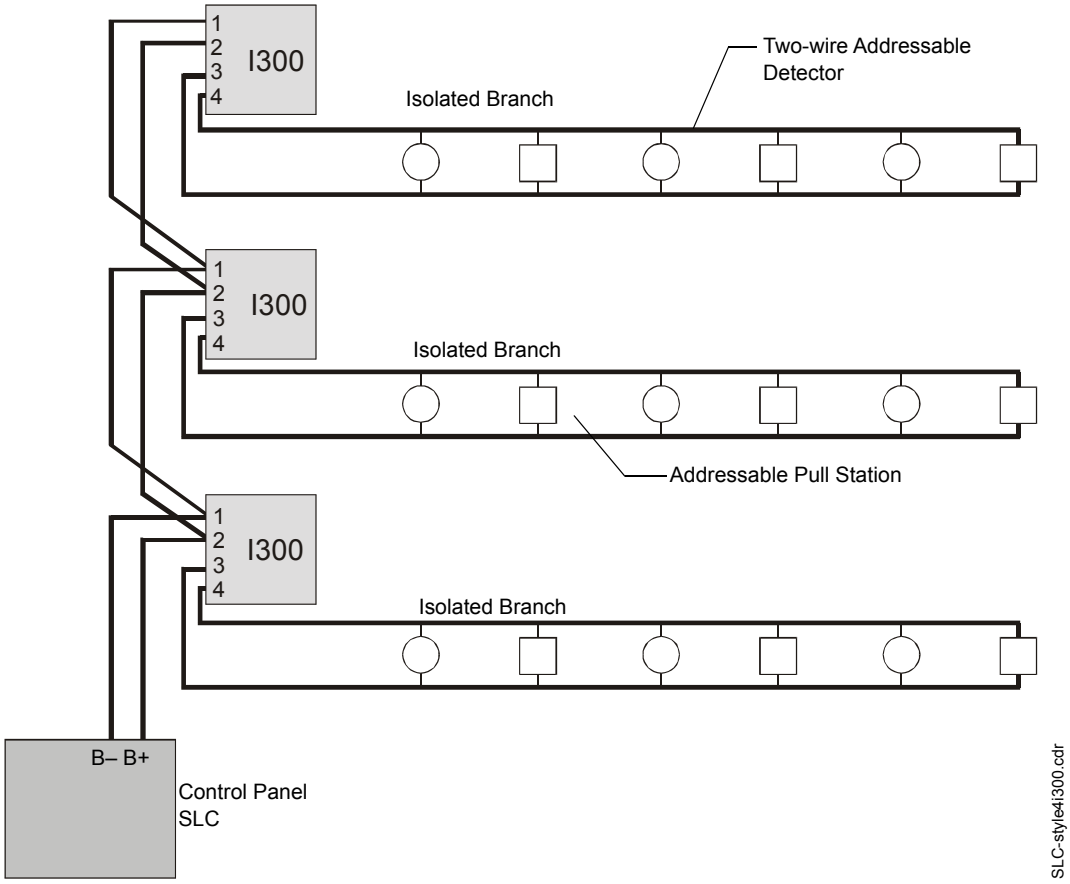

Figure 11 NFPA Style 4 SLC using I300 modules

NFPA Style 6 SLC Using an I300 Module

A variation of Style 6 operation using isolator modules to protect a section of the SLC. By flanking each group of devices with an I300 fault isolator module each group is protected from faults that may occur in the other groups. For example, a fault in Section B will not effect Sections A & C. The isolator modules on either side of Section B will open the loop. Section A will still operate from power on the SLC Out side and Section C will operate from the SLC Return side.

- A combination of isolator modules and isolator bases may be used.
- T-tapping is NOT allowed within the Style 6 configuration.
- I300 modules shall be within 20 feet (6.1 meters) of device and use metal conduit.

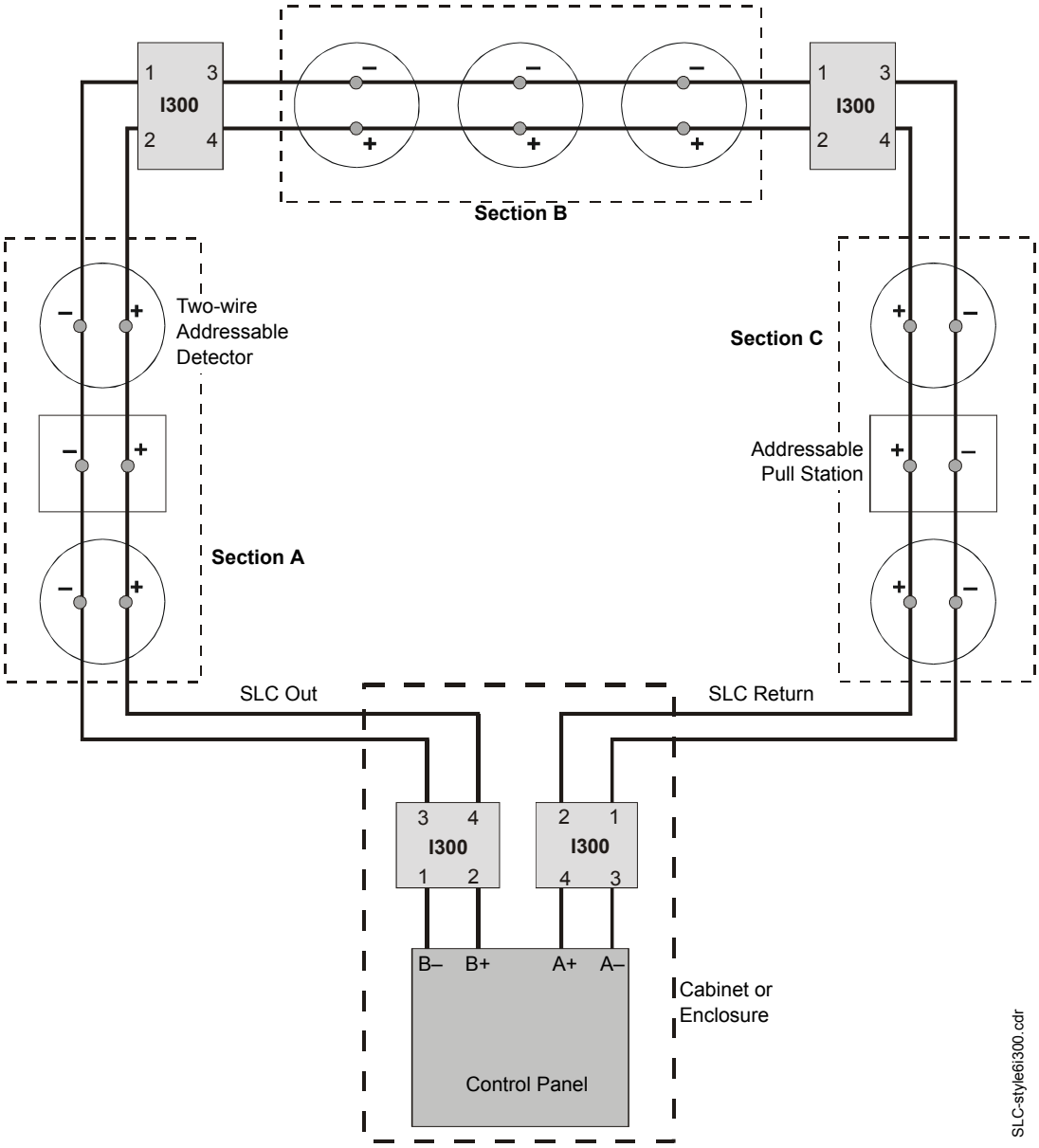

Figure 12 NFPA Style 6 SLC using I300 modules

NFPA Style 7 SLC Using an I300 Module

Style 7 operation requires using isolator modules before and after each device. Flanking each device with an isolator provides fault protection to all other devices on the loop.

- T-tapping is NOT allowed within the Style 7 wiring configuration.
- When a detector base or pull station is used, install I300 modules on both sides of the device.
- Connections between isolator modules and the device they isolate must be "close nippled" conduit, within 3 feet (91.44 cm).

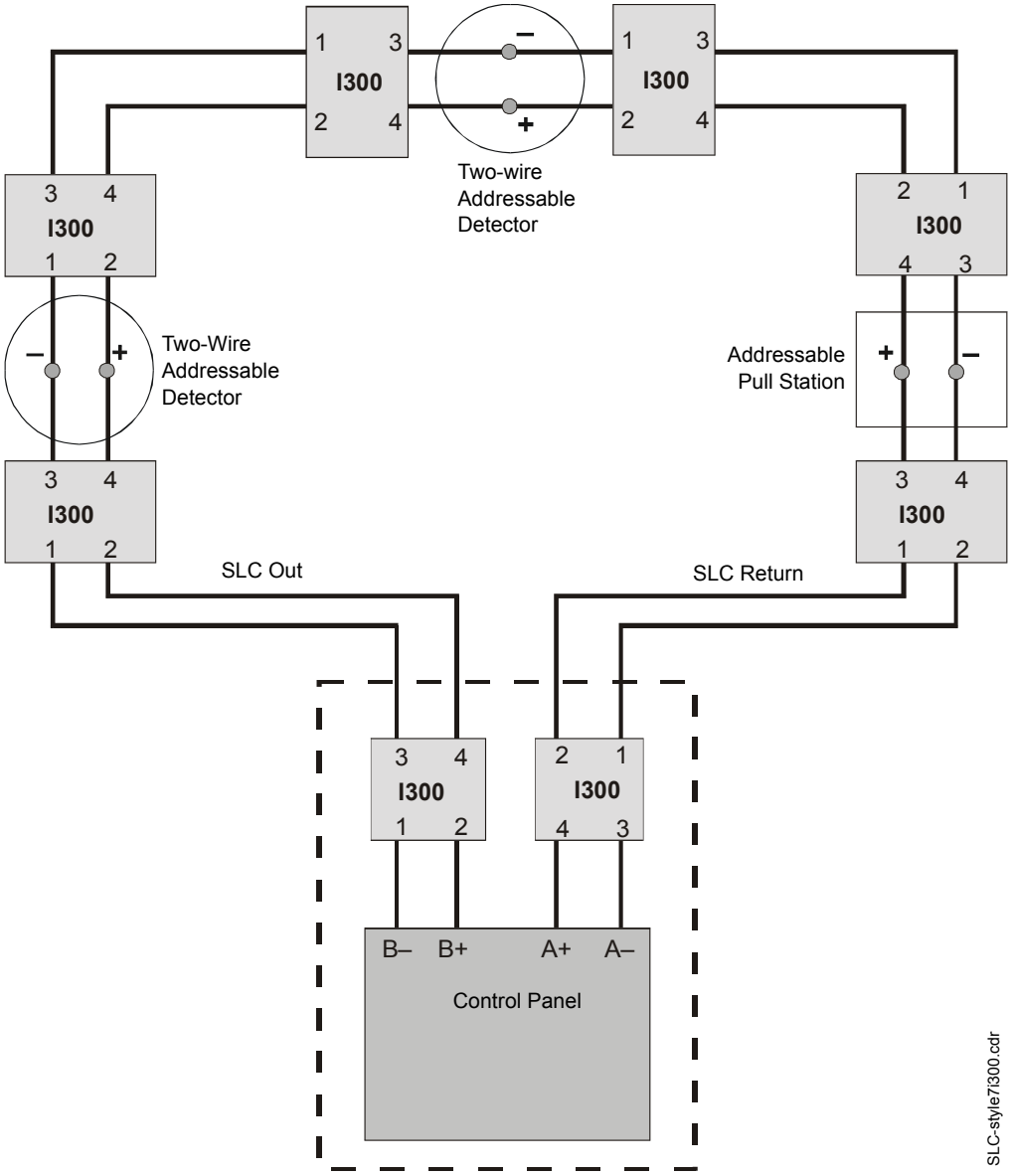

Figure 13 NFPA Style 7 SLC

Monitor Modules

Description

These addressable modules monitor conventional contact-type alarm initiating devices. You can configure module circuits as an NFPA Style B (Class B) or Style D (Class A) Initiating Device Circuits (IDC). There is no limit to the number of contact-type devices installed on a monitor module circuit.

Note: For more information on the individual module specifications refer to the *Installation Instructions* that are provides with this device.

MMF-300 Monitor Module

An addressable module that monitors either a Style B (Class B) or Style D (Class A) circuit of dry-contact input devices.

MDF-300 Dual Monitor Module

Similar to the MMF-300 but provides for two independent 2-wire IDCs at two separate, consecutive addresses.

MMF-302 Monitor Module

Similar to the MMF-300, except it is used to monitor a single IDC of two-wire smoke detectors.

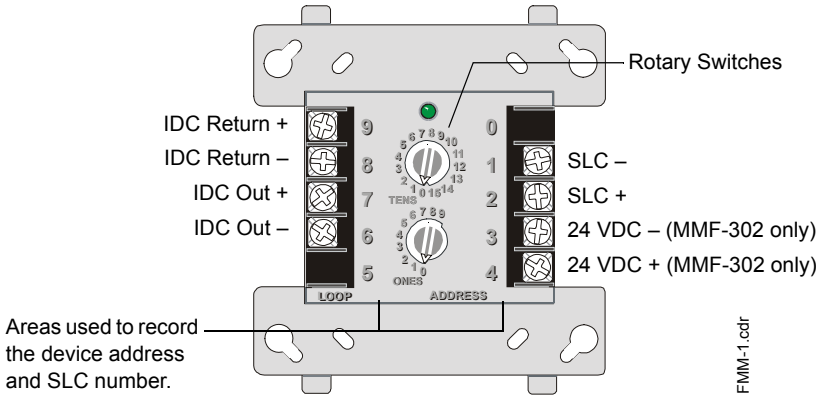

Figure 14 MMF-300 / MMF-302 Modules

MMF-301 Monitor Module

Functionally and electrically identical to an MMF-300, but offered in a smaller package for mounting directly in the electrical box of the device being monitored.

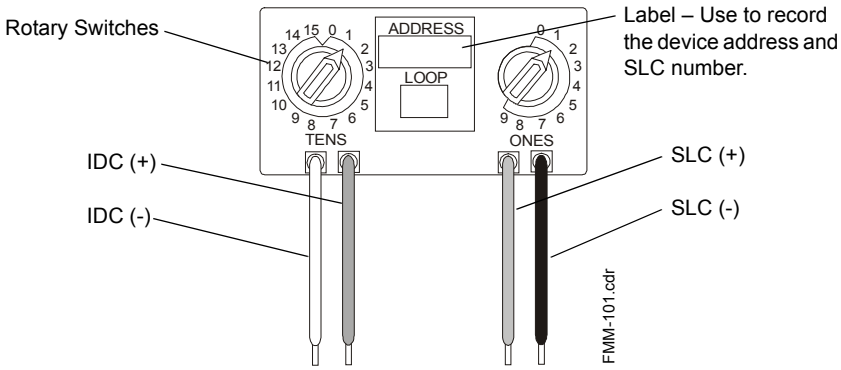

Figure 15 MMF-301 Module

Installation

When installing any of the modules, note the following:

1. The Initiating Device Circuit (IDC) is supervised and current-limited to 210 microamps @ 24 VDC (nominal).
2. The IDC provides the following services (do not mix):
   - Fire alarm service
   - Automatic and manual waterflow alarm service with normally open contact devices
   - Sprinkler supervision with normally open contact devices

Setting an SLC address for a Module

Each module can be set to one of 159 addresses (01-159) and is factory preset with an address of “00”.

Note: The Unimode 200 can support module addresses of 01 - 99. The Unimode 9600 can support module addresses 01 - 159.

To set an SLC address, use a common screwdriver to adjust the rotary switches on the module to the desired address. The module below is set at “35”. When finished, mark the address on the module face in the place provided.

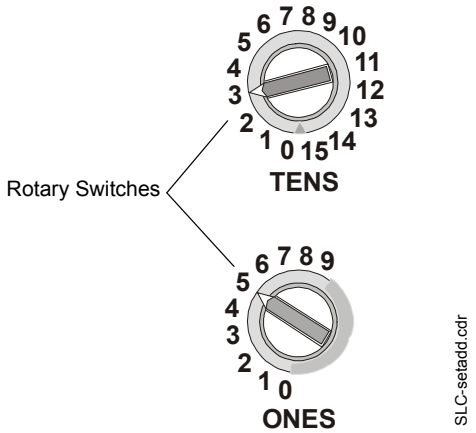

Figure 16 Setting SLC Address on Module

MMF-300 Wiring Diagrams

Following are wiring diagrams that depict NFPA Style B (Class B) and D (Class A) Initiating Device Circuits (IDCs) using MMF-300 monitor modules.

Wiring a NFPA Style B IDC with an MMF-300

Connect the SLC wiring to the module terminals 1 (–) and 2 (+).

Each module takes one address on the SLC. Use the rotary switches on the module to set it to the required SLC address.

The figure below shows typical wiring for a supervised and power-limited NFPA Style B IDC using an MMF-300 module.

- Refer to the *Device Compatibility Document* for compatible smoke detectors.
- See "Appendix A: Power Considerations" on page 41 for information on supervising 24 VDC power.

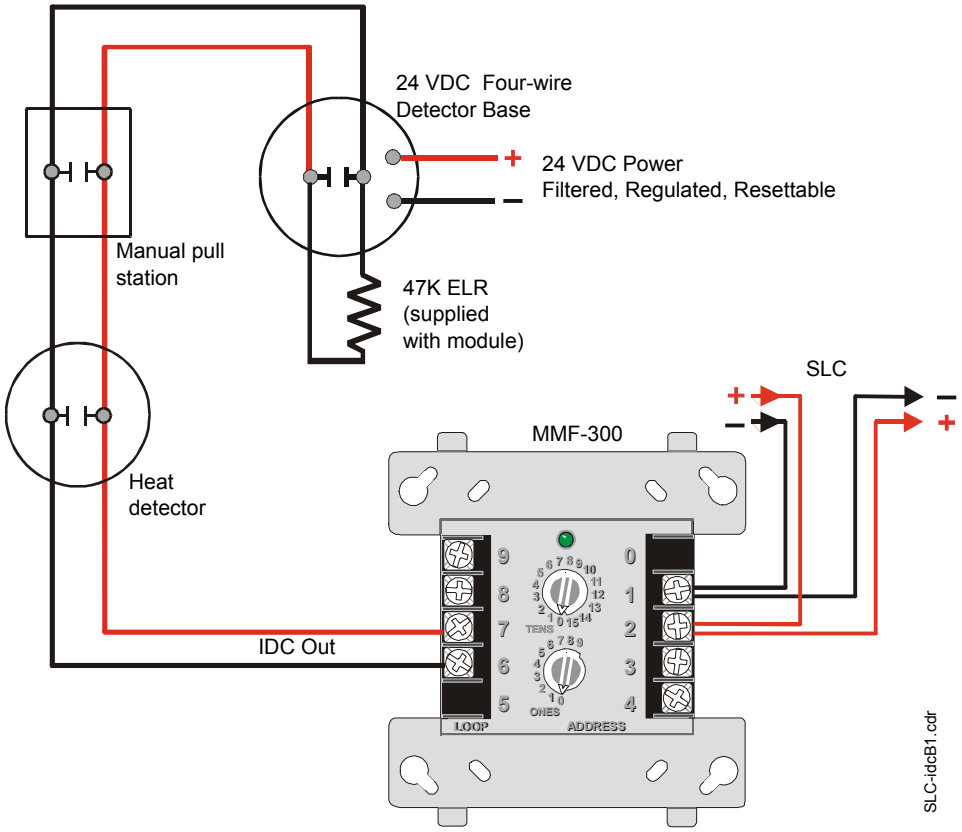

Figure 17 Typical Style B IDC Wiring with MMF-300

Wiring a NFPA Style D IDC with an MMF-300

Connect the SLC wiring to the module terminals 1 (–) and 2 (+).

Each module takes one address on the SLC. Use the rotary switches on the module to set it to the required SLC address.

The figure below shows typical wiring for a supervised and power-limited NFPA Style D (Class A) IDC using an MMF-300 module.

- Refer to the *Device Compatibility Document* for compatible smoke detectors.
- See "Appendix A: Power Considerations" on page 41 for information on supervising 24 VDC power.

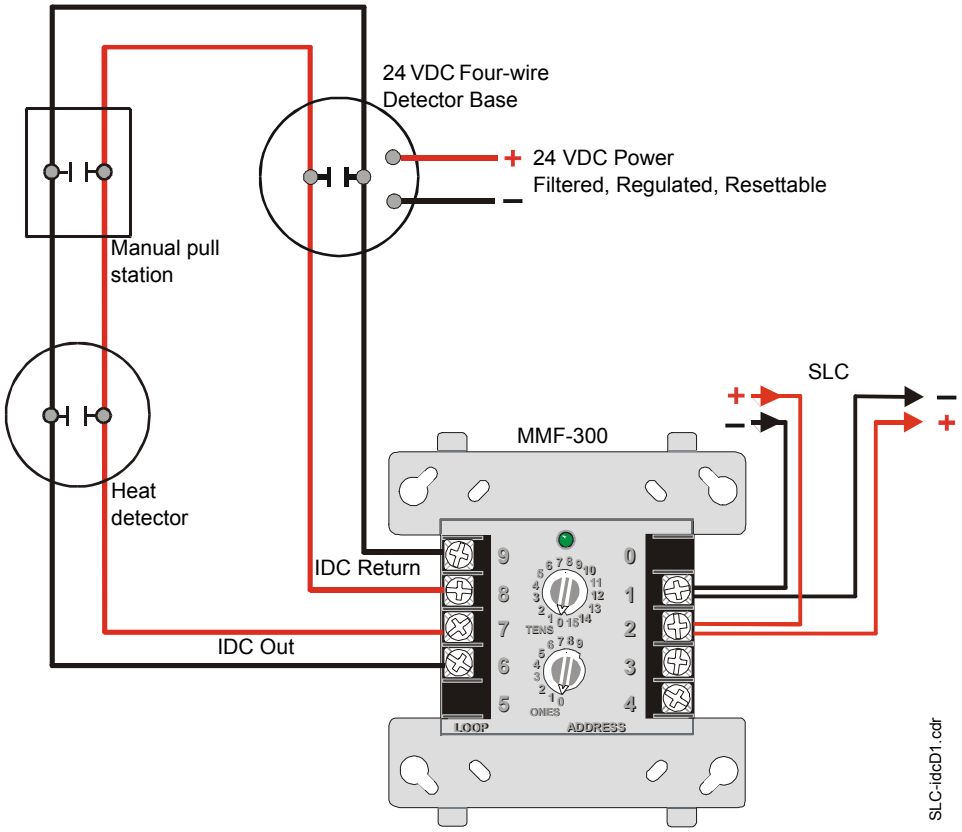

Figure 18 Typical Style D IDC Wiring with MMF-300

MDF-300 Wiring Diagrams

Following is a wiring diagrams that depict NFPA Style B (Class B) Initiating Device Circuits (IDCs) using MDF-300 dual monitor module.

Wiring a NFPA Style B IDC with an MDF-300

Connect the SLC wiring to the module terminals 1 (–) and 2 (+).

Use the rotary switches on the module to set it to the SLC address. Each dual module takes two addresses on the SLC. Circuit 'L' corresponds to the address set on the rotary switches, which will be an even number. Circuit 'H' will automatically respond to the next higher address, which will be an odd number. Use caution to avoid duplicate addressing of modules on the system.

Each IDC (H & L) is power limited to 230 microamps @ 24 VDC.

The figure below shows typical wiring for a supervised and power-limited NFPA Style B IDC using an MDF-300 module.

- Refer to the *Device Compatibility Document* for compatible smoke detectors.
- See "Appendix A: Power Considerations" on page 41 for information on supervising 24 VDC power.

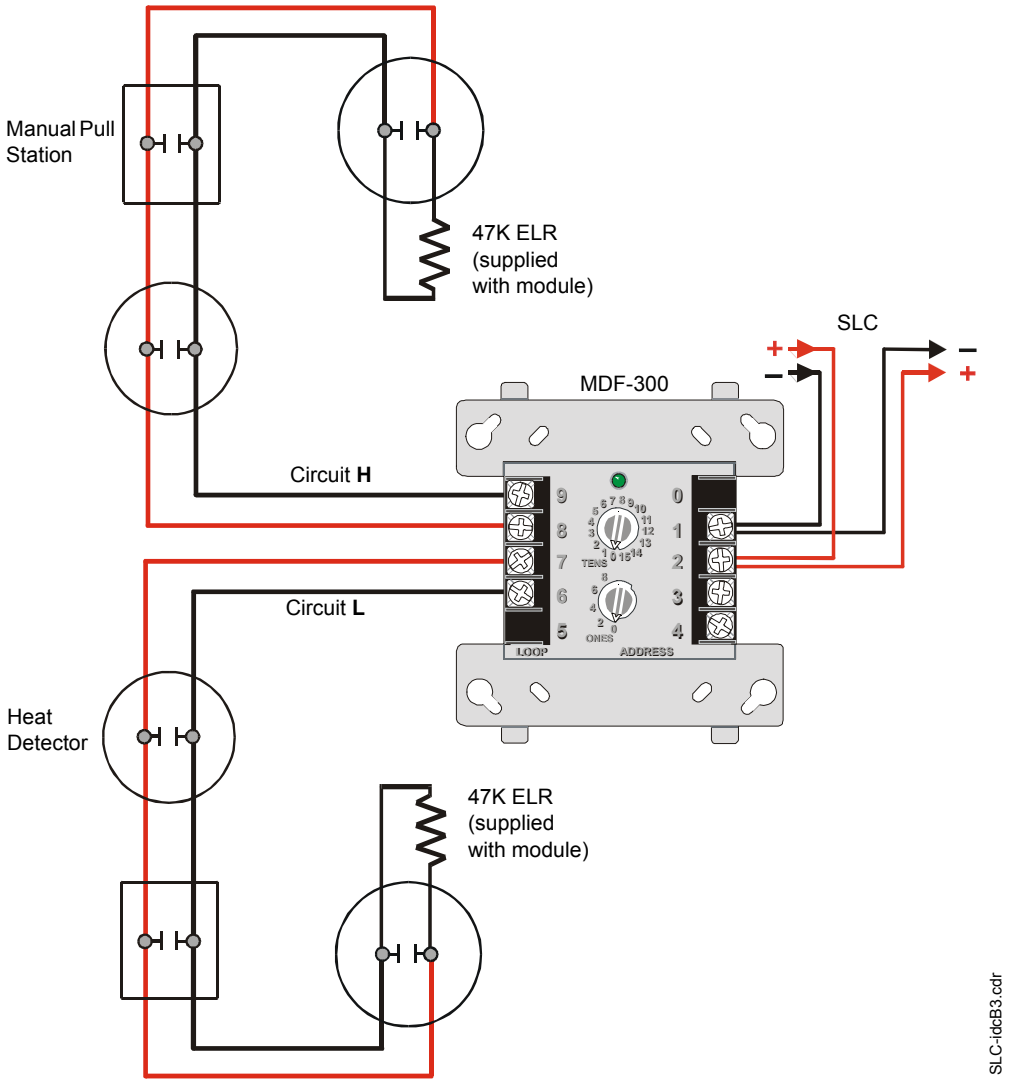

Figure 19 Typical Style B IDC Wiring with MDF-300

MMF-302 Wiring Diagrams

Following are wiring diagrams that concern NFPA Style B (Class B) and D (Class A) Initiating Device Circuits (IDCs) using MMF-302 monitor modules.

Wiring a NFPA Style B IDC with an MMF-302

Connect the SLC wiring to the module terminals 1 (–) and 2 (+).

Each module takes one address on the SLC. Use the rotary switches on the module to set it to the required SLC address.

The figure below shows typical wiring for a supervised and power-limited NFPA Style B IDC using an MMF-302 module.

- Refer to the *Device Compatibility Document* for compatible smoke detectors.
- 24 VDC power must be provided from a UL listed power supply for fire protection use. This power is inherently supervised by the module.
- See "Appendix A: Power Considerations" on page 41 for information on 24 VDC power.

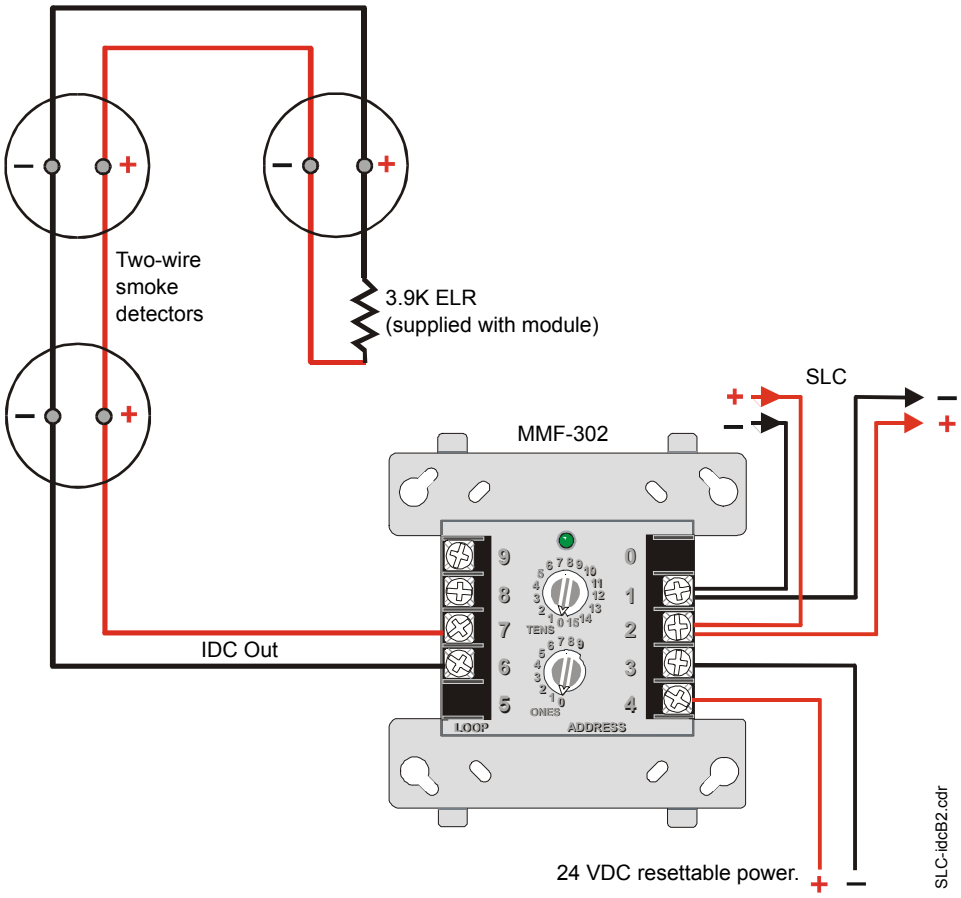

Figure 20 Typical Style B IDC Wiring with MMF-302

Wiring a NFPA Style D IDC with an MMF-302

Connect the SLC wiring to the module terminals 1 (–) and 2 (+).

Each module takes one address on the SLC. Use the rotary switches on the module to set it to the required SLC address.

The figure below shows typical wiring for a supervised and power-limited NFPA Style D (Class A) IDC using an MMF-302 module.

- Refer to the *Device Compatibility Document* for compatible smoke detectors.
- 24 VDC power must be provided from a UL listed power supply for fire protection use. This power is inherently supervised by the module.
- See "Appendix A: Power Considerations" on page 41 for information on 24 VDC power.

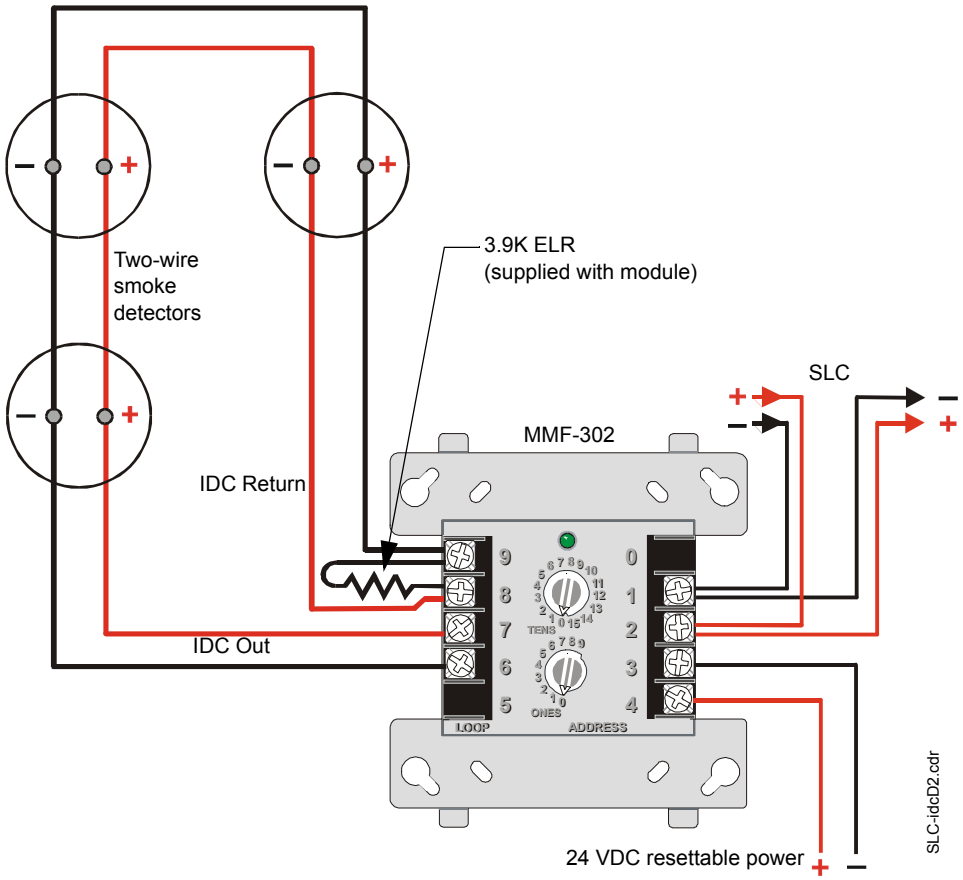

Figure 21 Typical Style D IDC Wiring with MMF-302

Notes

Control Modules

Description

The CMF-300 module is an addressable module that can be used for monitoring and switching 24 VDC Notification Appliance Circuit (NAC) power for NFPA Style Y (Class B) and NFPA Style Z (Class A) circuits.

Note: For more information on the module specifications refer to the *Installation Instructions* provided with this device.

Installation

Setting an SLC address for an CMF-300 Module

Each module is factory preset with an address of “00.” To set an SLC address refer to "Setting an SLC address for a Module" on page 24.

Wiring a Notification Appliance Circuit (NAC) with an CMF-300

The figure below shows the connections to wire a module for powering a 24 VDC NAC:

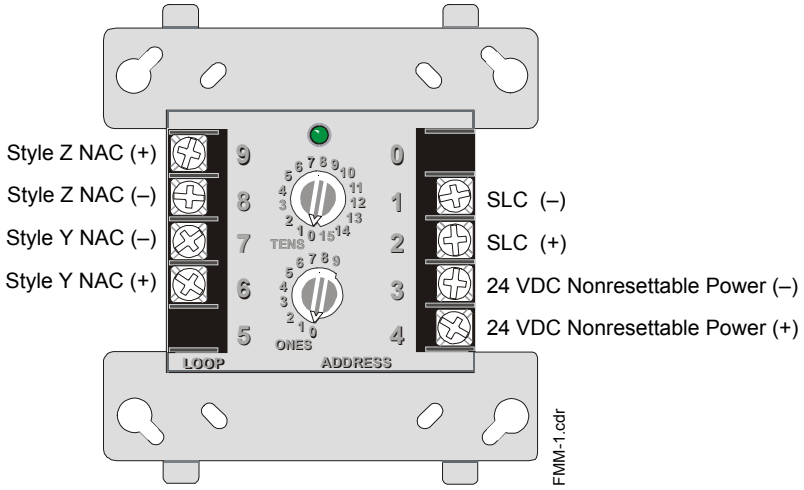

Figure 22 CMF-300 Wiring Connections

Wiring an CMF-300 Module

This section contains instructions and diagrams for wiring a Signaling Line Circuit with an CMF-300 as a Notification Appliance Circuit (NAC).

Wiring a Style Y NAC (Two-Wire)

A supervised and power-limited NFPA Style Y (Class B) NAC using a CMF-300 module. Polarized alarm notification appliances are shown connected to the module in a two-wire configuration.

Note: Refer to *Device Compatibility Document* for compatible notification appliances and relays.

- See "Appendix A: Power Considerations" on page 41 for information on monitoring 24 VDC power.
- Each module can control 2 amps of resistive load (on electronic devices) or 1 amp of inductive load (on mechanical bells and horns).
- 24 VDC power must be provided from a UL listed power supply for fire protection use.
- A power supervision relay is required only on the last module of the power run.
- Do not T-Tap or branch a Style Y circuit.
- Terminate the circuit across the last device using an End-of-Line Resistor 47K, 1/2-watt, P/N SSD A2143-00 (ELR-47K in Canada).
- Do not loop wiring under the screw terminals of any notification appliance. To maintain supervision, break the wire run at each device

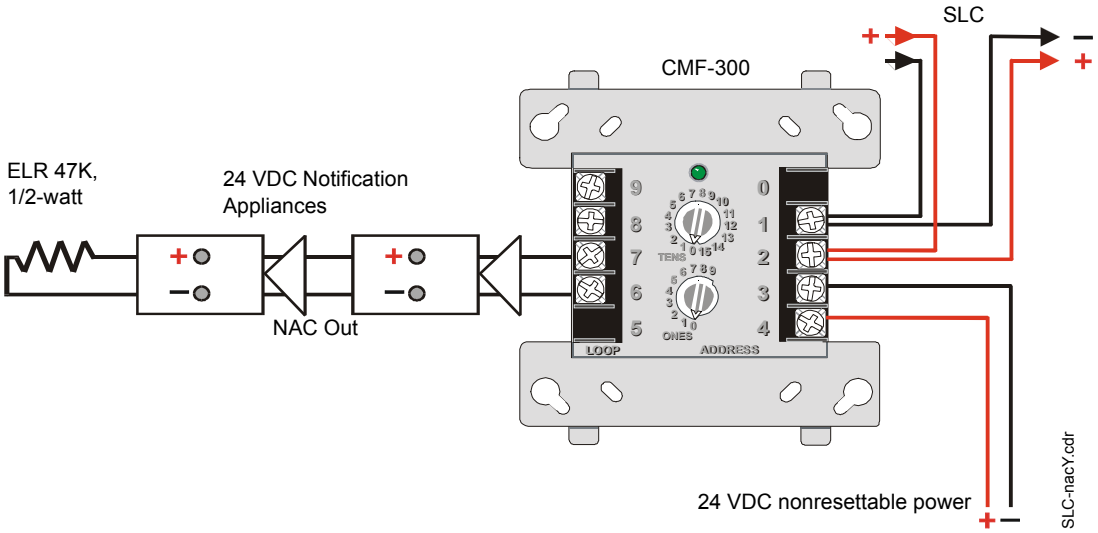

Figure 23 NFPA Style Y Notification Appliance Circuit

Wiring a Style Z NAC (Four-Wire)

A supervised and power-limited NFPA Style Z (Class A) NAC using a CMF-300 module. Polarized alarm notification appliances are shown connected to the module in a four-wire configuration.

Note: Refer to the *Device Compatibility Document* for compatible notification appliances and relays.

- See "Appendix A: Power Considerations" on page 41 for information on monitoring 24 VDC power.
- Each module can control 2 amps of resistive load (on electronic devices) or 1 amp of inductive load (on mechanical bells and horns).
- 24 VDC power must be provided from a UL listed power supply for fire protection use.
- A power supervision relay is required only on the last module of the power run.
- Do not T-Tap or branch a Style Z circuit.
- Do not loop wiring under the screw terminals of any notification appliance. To maintain supervision, break the wire run at each device.

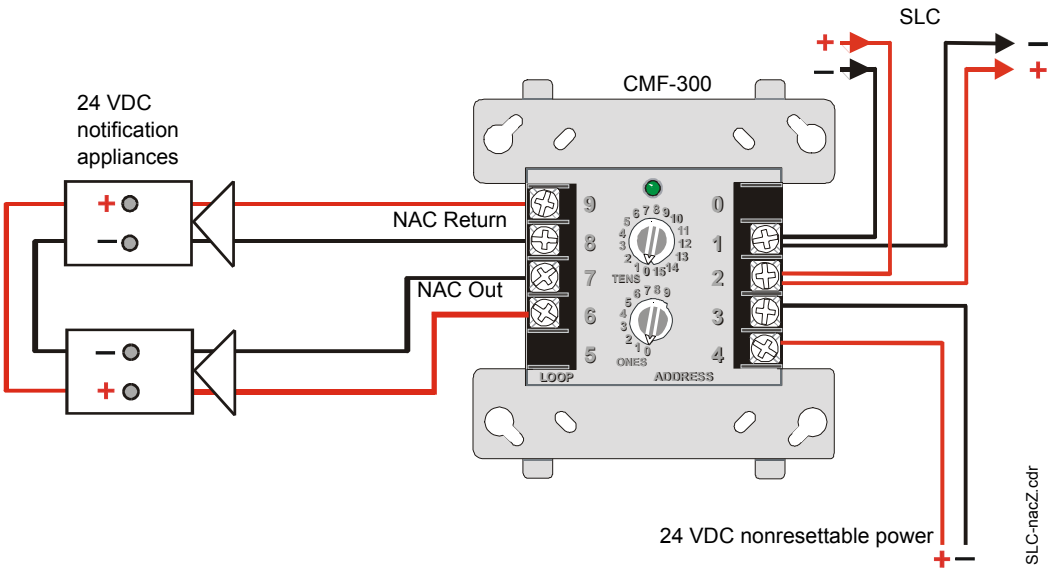

Figure 24 NFPA Style Z Notification Appliance Circuit

Notes

Relay Module

Description

The CRF-300 module is an addressable module that provides Form-C relay contacts.

Ratings for the dry relay contacts on a Form-C module are:

- Resistive - 2 amps @ 30 VDC
- Inductive - 1 amp @ 30 VDC (0.6pf)
- Pilot Duty - 0.5 amp @ 125 VAC (0.35pF)

Note: For more information on the module specifications refer to the *Installation Instructions* provided with this device.

Installation

Setting an SLC address for a CRF-300 Module

Each module is factory preset with an address of “00.” To set an SLC address refer to “Setting an SLC address for a Module” on page 24.

Wiring a CRF-300 Module (Form-C Relay)

The figure below shows a CRF-300 module wired to the Control Panel:

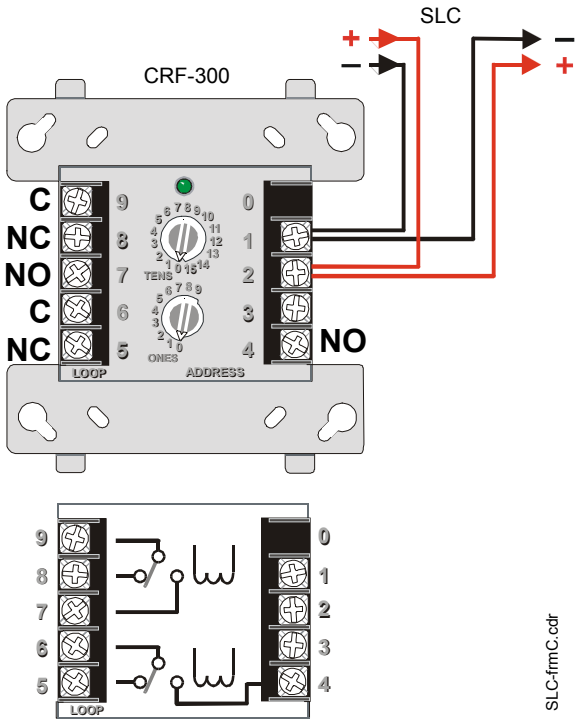

Figure 25 CRF-300 Wiring Connections

Notes

Intelligent Detector Bases

Description

The following bases provide connection between the SLC and these detector heads:

- AD350 Multicriteria Photoelectric Smoke Detector
- CP350 Ionization Smoke Detector
- H350 and H350R Thermal Detector
- SD350 and SD350T Photoelectric Smoke Detector

The **B350LP** Detector Base is a standard plug-in base provided with each detector head.

The **B501BH** Sounder Detector Base includes a horn that will sound when the sensor's visible LEDs are latched on for approximately 10 seconds.

On the Unimode 200 control panel, the sounder will activate when the sensor's visible LEDs are latched on for approximately 10 seconds (Alarm Verification does not delay sounder).

If the Unimode 9600 control panel is set with Alarm Verification ON, the sounder will activate at the end of the verification cycle, providing an alarm is verified, approximately 10 seconds after the sensor's LEDs are latched on. If Alarm Verification is OFF, the sounder will activate when the sensor's visible LEDs are latched on for approximately 10 seconds.

The **B524RB** Relay Detector Base includes Form-C latching relay contacts for the control of an auxiliary function. The relay operates 12 seconds (nominally) after activation of the sensor head remote annunciator output.

Note: For more information refer to the *Installation Instructions* document provided with these devices.

Installation

Setting the Detector Address

Each intelligent detector is factory preset with an address of "00." To set an SLC address, use a common screwdriver to adjust the rotary switches on the detector to the desired address (see "Setting an SLC address for a Module" on page 24). When finished, mark the address in the place provided on the base and the detector.

Wiring a Detector Base

Typical wiring of a detector base (B350LP shown) connected to an SLC is shown in the figure below. An optional **RA400Z** Remote LED Annunciator is shown connected to the detector.

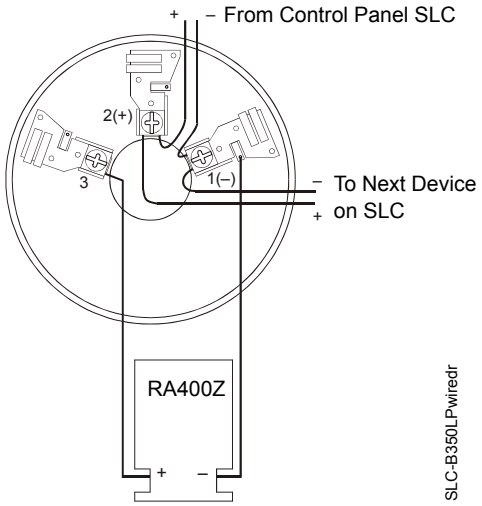

Figure 26 Detector Terminal Block Wiring

Notes

Addressable Manual Pull Station

Description

The **ADT-BG-12LX** is an addressable manual pull station with a key-lock reset feature.

Note: For more information refer to the *Installation Instructions* document provided with this device.

Installation

Setting an SLC address

Each unit is factory preset with an address of “00.” To set an SLC address refer to "Setting an SLC address for a Module" on page 24.

Wiring a Manual Pull Station

Typical wiring for a ADT-BG-12LX Manual Pull Station to an SLC:

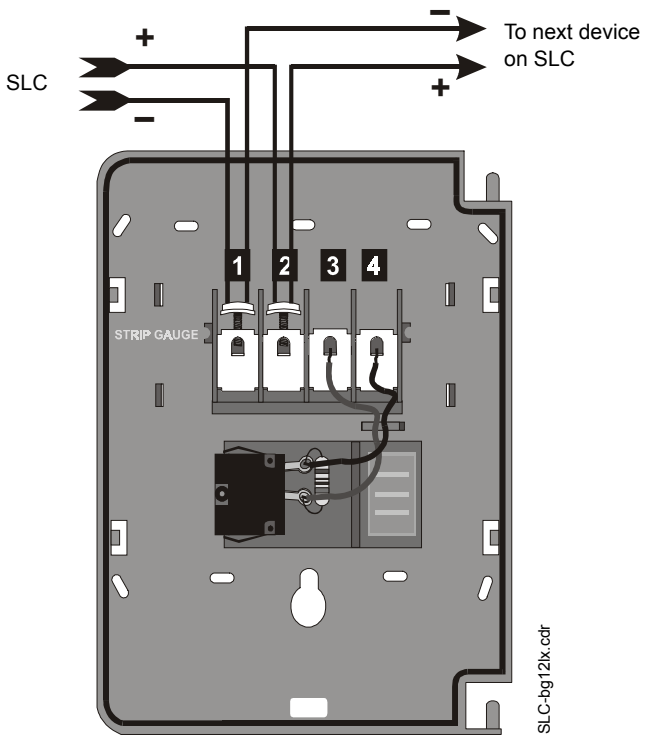

Figure 27 Wiring of an ADT-BG-12LX Pull Station to an SLC

Notes

Appendix A: Power Considerations

Supplying Power to 24 VDC Detectors

Resistance and Size

To determine the minimum resistance that can be tolerated in supplying power to 24 VDC 4-wire detectors, use the calculation below. Use this resistance to select the proper gauge wire for the power run from the manufacturers specifications for the desired wire.

$$Rmax = \frac{(18.1 - Vom)}{(N)(Is) + (Na)(Ia) + (Ir)}$$

Where:

Rmax = maximum resistance of the 24 VDC wires
Vom = minimum operating voltage of the detector or end-of-line relay, whichever is greater, in volts
N = total number of detectors on the 24 VDC supply circuit
Is = detector current in standby
Na = number of detectors on the 24 VDC power circuit which must function at the same time in alarm
Ia = detector current in alarm
Ir = end-of-line relay current

Supervising 24 VDC Power

Power used to supply 24 VDC notification appliances (using the CMF-300) can be supervised with a power supervision relay. This relay, energized by the 24 VDC power itself, is installed at the end of each respective power run and wired inline with the supervised circuit of any intelligent module.

- 24 VDC power must be provided from a UL listed power supply for fire protection use.

When power is removed from the relay, the normally closed contacts open the supervised circuit, generating a trouble condition. Therefore, the relay needs to be installed at the end of the supervised circuit, so as to not disrupt the operating capability of all the devices on that circuit. The relay can be installed inline with any leg (+ or –) of the supervised NAC circuit, either a Style B (Class B) or a Style D (Class A) circuit.

The drawing below illustrates this concept.

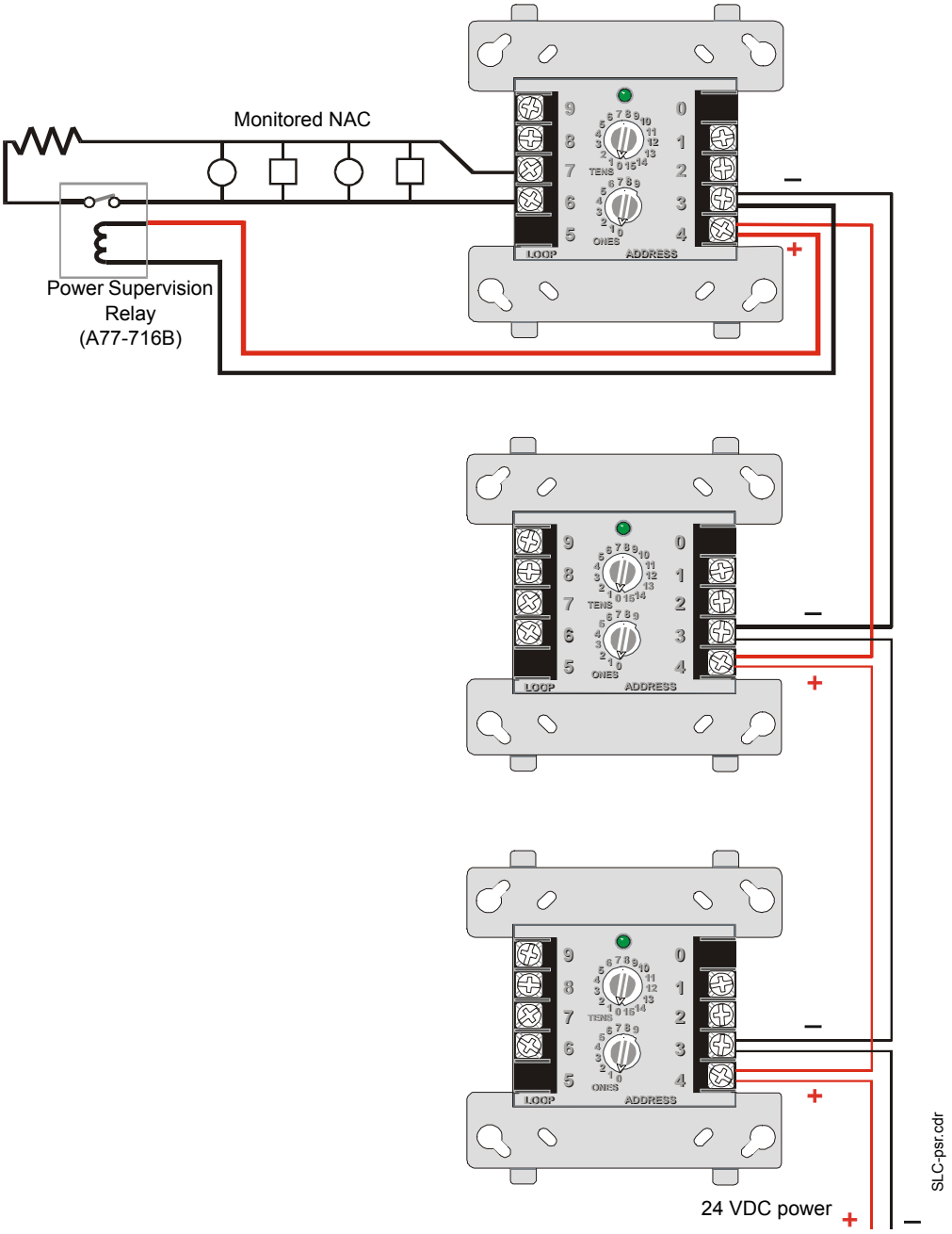

Figure 28 Supervised 24 VDC Circuit

Supervising 24 VDC Power to Notification Appliances

An alternate method of supervising 24 VDC power fed to the Notification Appliance Circuit of the CMF-300 module eliminates the need for a power supervision relay. This method uses a Notification Appliance Circuit from the control panel or power supply to supply power to the CMF-300 modules. The control panel supervises this circuit, which can be either a Style Y or Style Z.

Style Y NAC Power Wiring

Program the NAC from the control panel for general alarm. (Refer to the programming manual or programming section of your FACP documentation for instructions.) Note that if the NAC is a coded output, the CMF-300 module will be coded as well.

Note: Refer to the *Device Compatibility Document* for compatible notification appliances.

- The circuit is supervised and power-limited.
- In this circuit, an external ELR **is** required at end of the NAC circuit.
- Refer to the respective control panel installation manual for NAC terminal block connection information and ELR value.

Connect the NAC power as follows:.

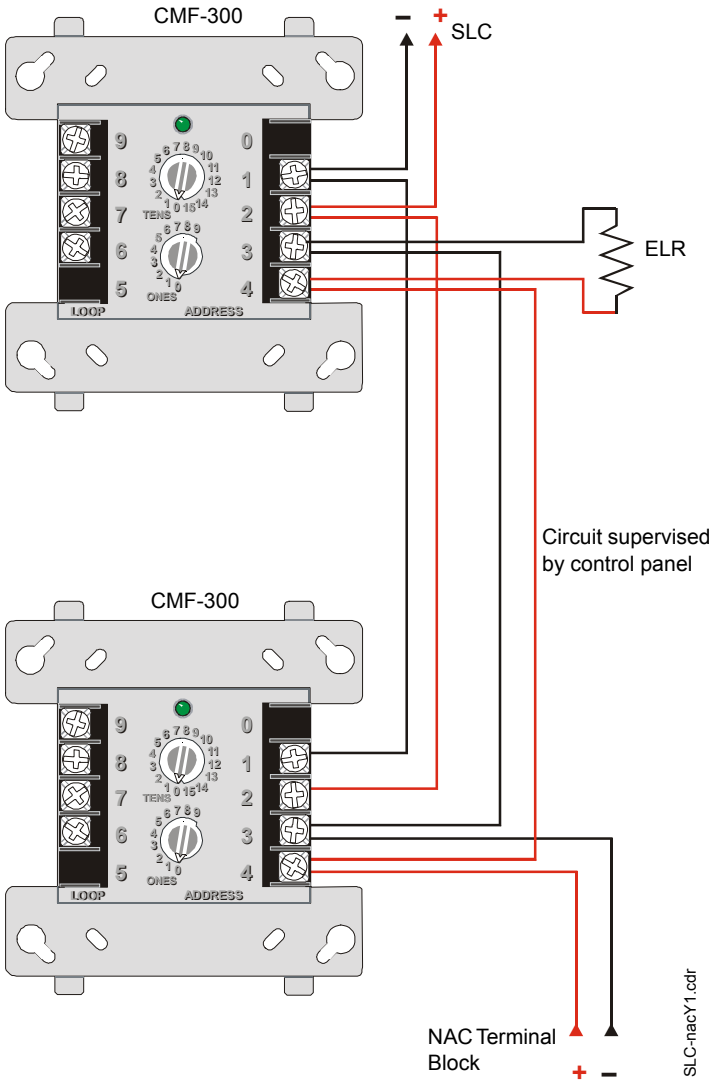

Figure 29 NFPA Style Y NAC Power (Alternate)

Style Z NAC Power Wiring

Program the NAC from the control panel for general alarm. (Refer to the programming manual or programming section of your FACP documentation for instructions.) Note that if the NAC is a coded output, the CMF-300 module will be coded as well.

Note: Refer to the *Device Compatibility Document* for compatible notification appliances.

- The circuit is supervised and power-limited.
- In this circuit, an external ELR is **not** required at end of the NAC circuit.
- Refer to the respective control panel installation manual for NAC terminal block connection information.

Connect the NAC power as follows:

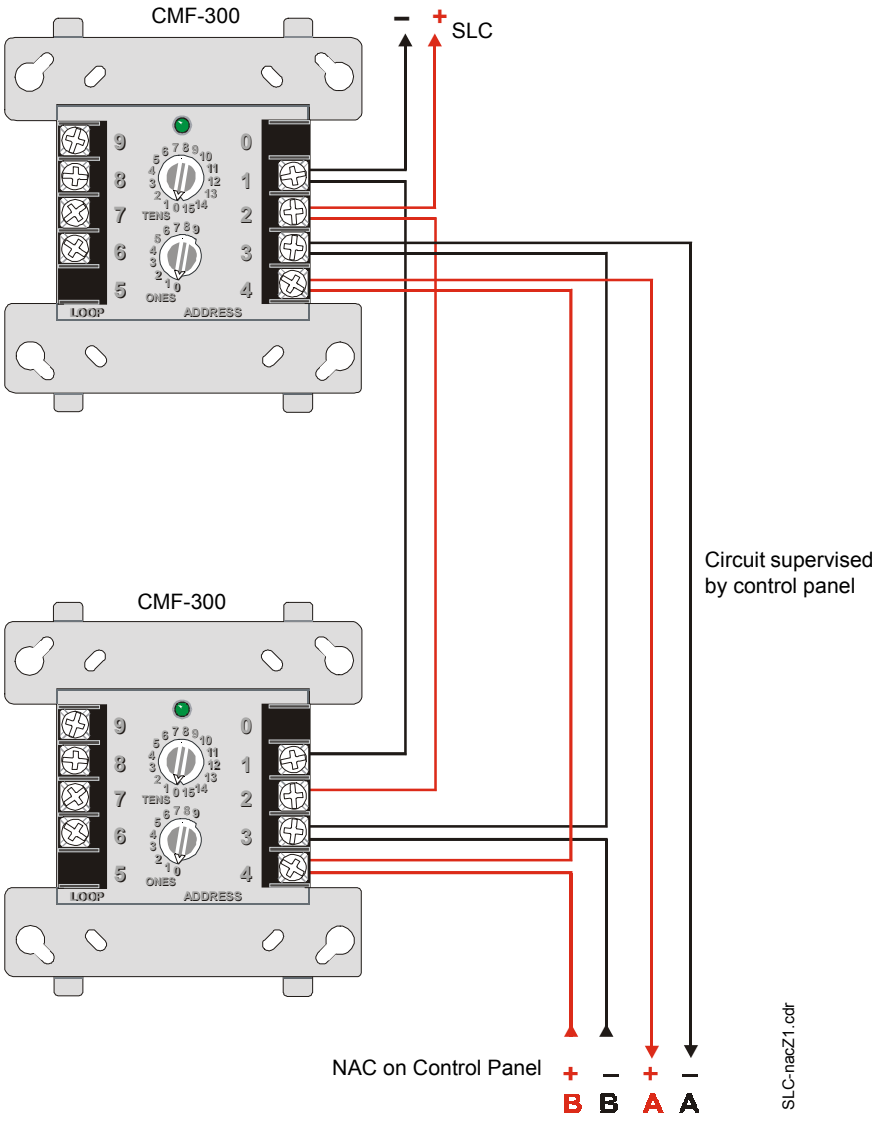

Figure 30 NFPA Style Z NAC Power (Alternate)

Appendix B: Surge Suppression

Introduction

There are three (3) primary surge protectors that are approved for use with the Unimode 200 and Unimode 9600.

- **DTK-2LVLP-F** Diversified Technology Group, Inc. 1720 Starkey Rd. Largo, FL 33771 (727) 812-5000
- **SLCP-030** EDCO 1805 N.E. 19th Ave. Ocala, FL 34470 (352) 732-3029
- **PLP-42N** Northern Technologies, Inc. 23123 E. Madison Ave. Liberty Lake, WA 99019 (800) 727-9119

Note: For detailed information refer to the installation documentation supplied with the unit.

One primary surge protector must be used with each SLC wiring pair whenever SLC wiring runs outside the building.

- Install primary protection only as shown in this document.
- Refer to NEC Article 800 and local building code requirements.

Additional primary surge suppressors may be added as required by the NEC. Add these additional suppressors in series with the SLC wiring at the building entry/exit.

Wiring connected to the surge suppressor output must remain within the building while wiring connected to the surge suppressor input may be routed outside the building as shown below.

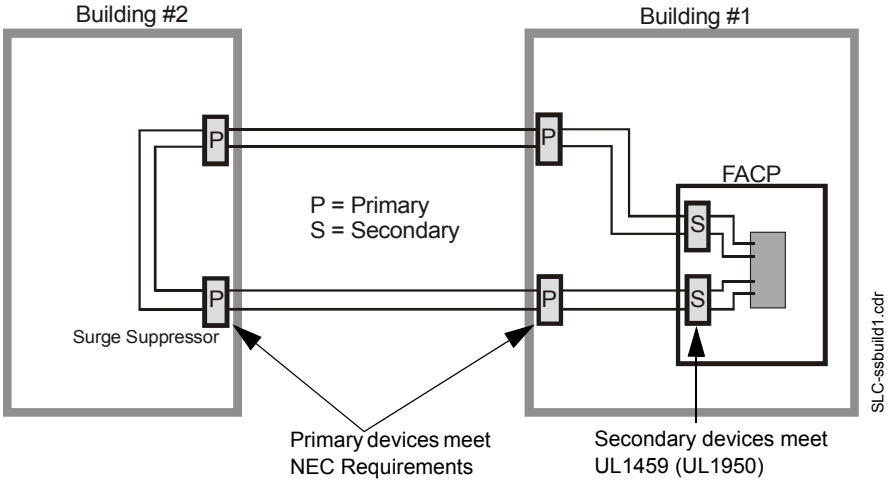

Installation

Mounting of the surge suppressor must be inside the FACP enclosure or in a separate enclosure listed for fire protective signaling use.

- Locate on an available stud and secure with nut.
- Unit is connected in series with the SLC Loop to protect the Control Panel.
- Provide a common ground to eliminate the possibility of a differential in ground potentials.

Wiring Diagram for Unimode 200

DTK-2LVLP-F Connections

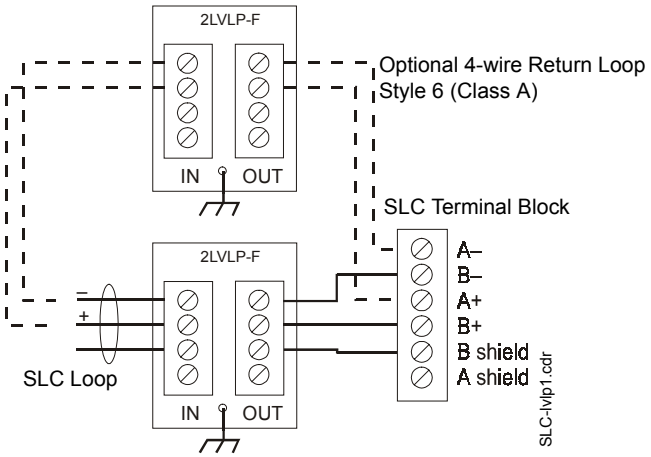

PLP-42N Connections

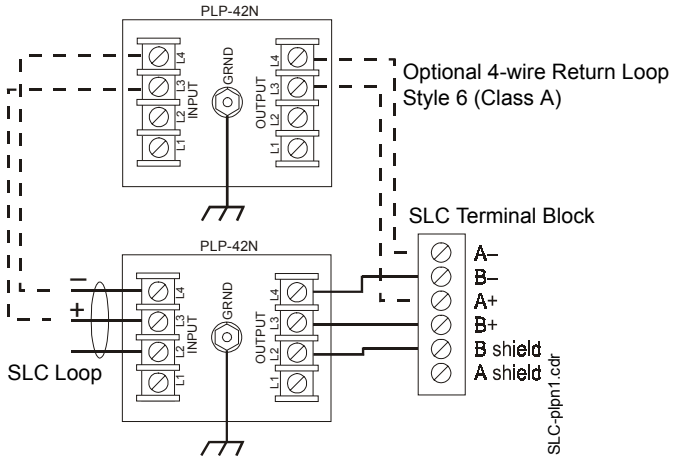

Note: Use 12AWG (3.25mm^2) to 18AWG (0.75mm^2) wire with crimp-on connectors to connect the unit's ground terminal to equipment ground. Wire length must be minimized to provide best protection.

SLCP-030 Connections

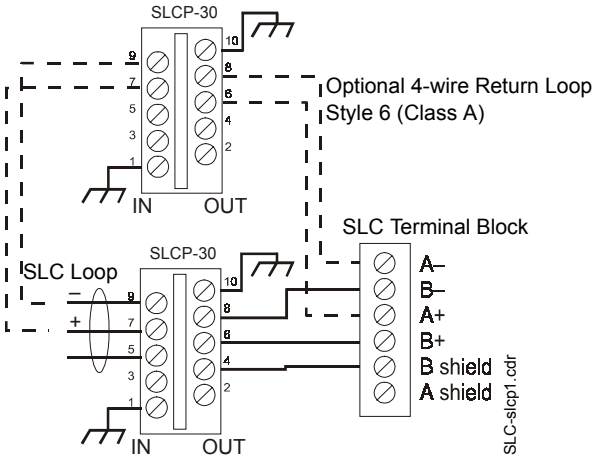

Wiring Diagram for Unimode 9600

DTK-2LVLP-F Connections

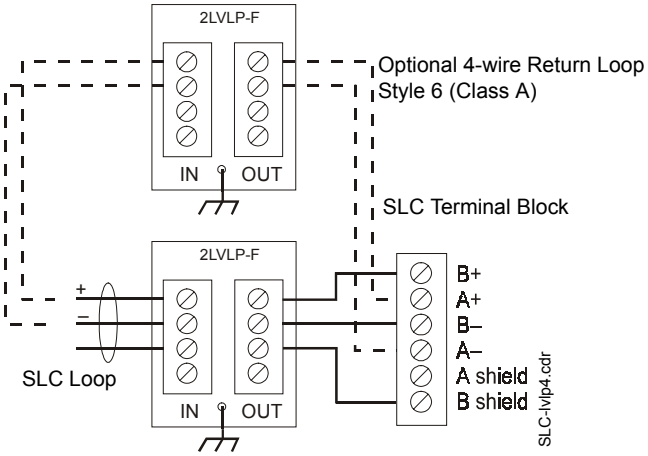

PLP-42N Connections

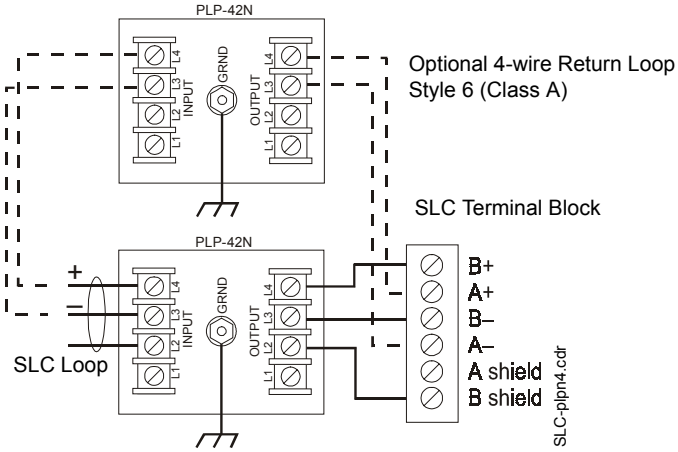

Note: Use 12AWG (3.25mm^2) to 18AWG (0.75mm^2) wire with crimp-on connectors to connect the unit's ground terminal to equipment ground. Wire length must be minimized to provide best protection.

SLCP-030 Connections

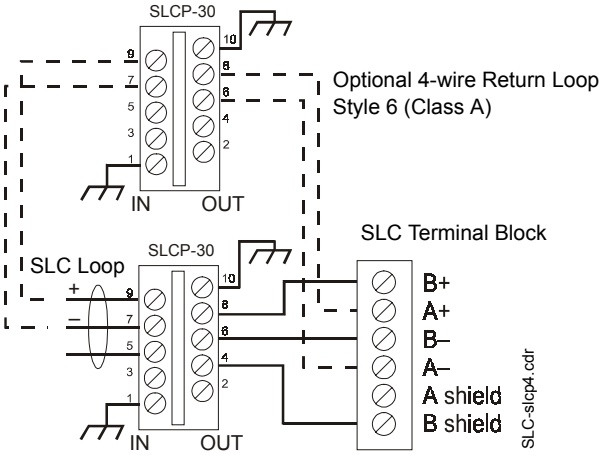

Index